binder

NEWS

English
Version

03/2022

Contents

Range	Description	Series	Page
SUBMINIATURE			
Snap-in IP67	Safety clip	620	6–7
NCC IP67	Cable and panel-mount connectors	670	8–9
MINIATURE			
Snap-in IP67	Safety clip	720	12–13
NCC IP67	Moulded cable connectors	770	14–15
M16 IP67	Cable connectors, short version, shieldable	423	16–17
AUTOMATION TECHNOLOGY Sensors & Actuators			
M8	Moulded snap-in cable connectors with 5 and 6 contacts	718	20–21
M8	Moulded and shielded male cable connector	718	22–23
M12-A	Lead-through for control cabinets	713	24–25
M12-A	Rectangular male panel-mount connectors 20 and 26 mm	713 · 763	26–27
AUTOMATION TECHNOLOGY Data Transmission			
M8-D	Field-attachable, moulded and panel-mount connectors	818	30–33
AUTOMATION TECHNOLOGY Voltage & Power Supply			
M12-S/-K/-T/-L	Lead-through for control cabinets	814 · 824 · 813 · 823	36–37
M12-K/-L	Cable connectors according to UL 2237	824 · 823	38–41
M12-L	Panel-mount connectors two-part design	823	42–43

SUB MINI ATURE

Snap-in

Series	620
Number of lugs	3
Material	PA
Connection	Snap

620 Series · Snap-in safety clip

- Accessories 620 series snap
- Three snap tabs
- High retention force
- Black colour. White upon request
- Marking for easy assembly
- Lockable with cable tie
- Reusable
- Packaging unit 10 pcs.
- Available

Description	Drawing	Ordering-No.
Safety clip		08 0219 000 000

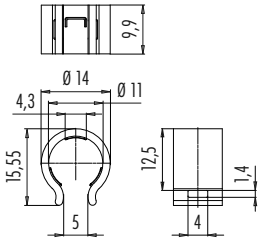

Bayonet NCC

Series	670
Contacts	5
Rated current	2 A
Rated voltage	50 V
Degree of protection	IP54 female panel-mount connector in unmated condition, IP67 in mated condition
Contact plating	Au (gold)
Termination	solder, dip solder

670 NCC Series · Cable and panel-mount connectors

- Male cable connector with 3-5 mm cable outlet
- Panel-mount connectors with solder and dip solder contacts
- Panel-mount connectors in unmated condition IP54
- IP67 in mated condition
- Panel-mount connectors with front or rear fastening
- > 1000 mating cycles
- Bayonet locking system
- Available

Description	Drawing	Contacts	Ordering-No.
Male cable connector		5	99 0759 010 05

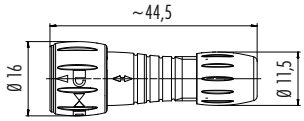

Description	Drawing	Contacts	Ordering-No.
Female panel-mount connector, solder/dip solder	solder / dip solder	5	09 0762 000 05 solder 09 0762 090 05 dip solder

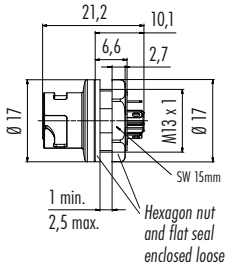

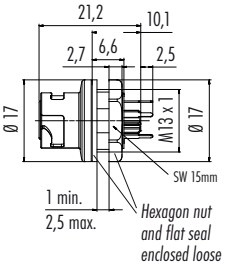

Description	Drawing	Contacts	Ordering-No.
Female panel-mount connector, front fastened, solder/dip solder	solder / dip solder	5	09 0762 180 05 solder 09 0762 190 05 dip solder

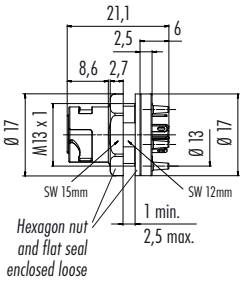

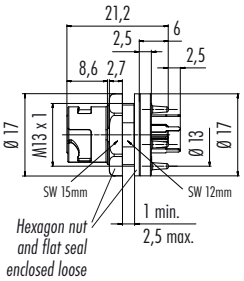

Assembly instruction

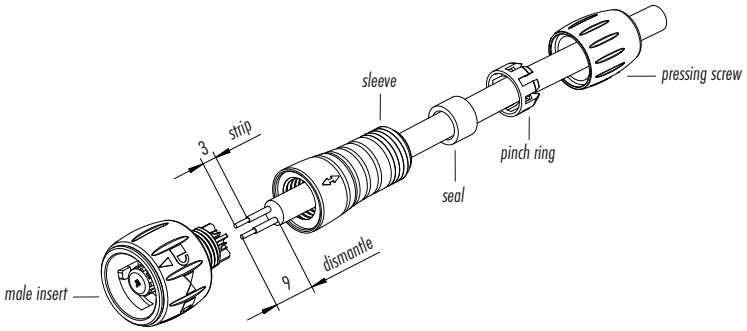

Contact arrangements	Male insert (termination side)	Female insert (termination side)	Panel cut out	Drilling schemes

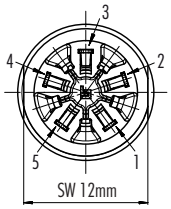

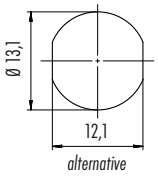

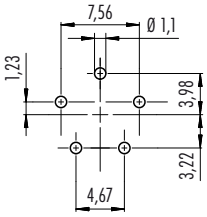

MINI
ATURE

Snap-in

Series	720
Number of lugs	3
Material	PA
Connection	Snap

720 Series · Snap-in safety clip

- Accessories 720 series snap
- Three snap tabs
- High retention force
- Black colour. White upon request
- Marking for easy assembly
- Lockable with cable tie
- Reusable
- Packaging unit 10 pcs.
- Available

Description	Drawing	Ordering-No.
Safety clip	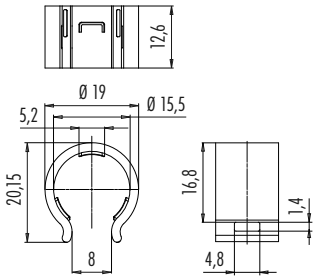	08 0216 000 000

Bayonet NCC

Series	770
Contacts	8
Rated current	2 A
Rated voltage	175 V
Design	With bayonet ring in black Colour upon request
Degree of protection	IP67 in mated condition
Contact plating	Au (gold)
Termination	PVC/PUR cable

770 NCC Series · Moulded male cable connectors

- Connectors moulded on cable
- Straight version
- PVC and PUR cable
- Black, colour upon request
- IP67 in mated condition
- > 5000 mating cycles
- Bayonet locking system
- Standard cable length 2 m and 5 m
- Other lengths upon request
- Available

Description

Cable connector, moulded, black

Drawing

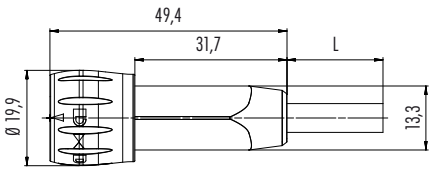

Contacts	Cable	Cable length	Ordering-No.
8	PVC	2 m	77 6005 0000 20008–0200
		5 m	77 6005 0000 20008–0500
	PUR	2 m	77 6005 0000 50008–0200
		5 m	77 6005 0000 50008–0500

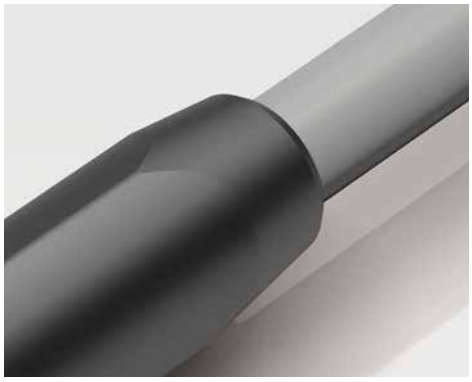

M16 IP67

Series	423
Contacts	2–19
Rated current	3–7 A
Rated voltage	32 V / 150 V
Cable outlet	4.1–7.8 mm
Degree of protection	IP67 in mated condition
Contact plating	AG (silver), Au (gold)
Termination	solder, crimp

423 Series · M16 Cable connectors, short version, shieldable

- Product launch 423 series
- Shieldable with cable clamp
- Cable outlet 4.1 – 7.8 mm
- Length approx. 47 mm
- > 500 Mating cycles
- IP67 in mated condition
- Solder and crimp connection
- Crimp contacts must be ordered separately
- Other pole numbers on request
- Available

Description	Drawing	Contacts	Ordering-No.
Male cable connector with cable clamp, solder contacts, shieldable		2	99 5101 60 02
		3 DIN	99 5105 60 03
		4	99 5109 60 04
		5	99 5113 60 05
		6 DIN	99 5121 60 06
		7	99 5125 60 07
		8 DIN	99 5171 60 08
		12	99 5129 60 12
		19	99 5461 60 19
Male cable connector with cable clamp, crimp contacts, shieldable		4	99 5109 760 04
		5	99 5113 760 05
		6 DIN	99 5121 760 06
		7	99 5125 760 07
		8 DIN	99 5171 760 08
Female cable connector with cable clamp, solder contacts, shieldable		2	99 5102 60 02
		3 DIN	99 5106 60 03
		4	99 5110 60 04
		5	99 5114 60 05
		6 DIN	99 5122 60 06
		7	99 5126 60 07
		8 DIN	99 5172 60 08
		12	99 5130 60 12
		14	99 5152 60 14
		19	99 5462 60 19
Female cable connector with cable clamp, crimp contacts, shieldable		4	99 5110 760 04
		5	99 5114 760 05
		6 DIN	99 5122 760 06
		7	99 5126 760 07
		8 DIN	99 5172 760 08

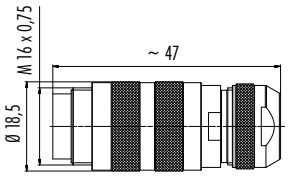

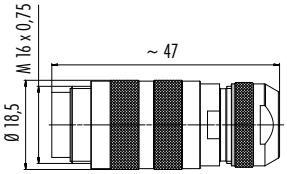

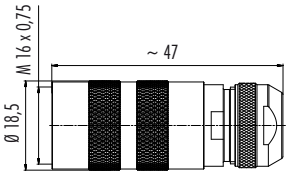

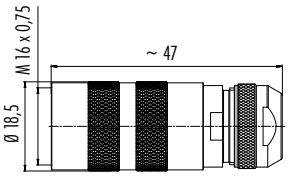

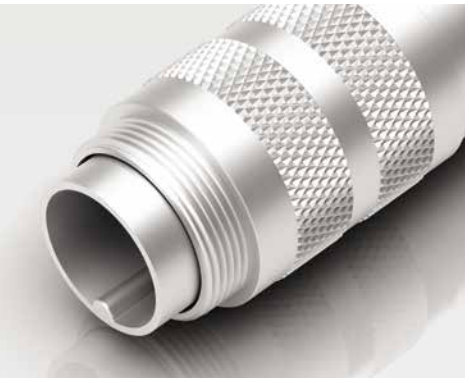

SENSORS AND ACTUATORS

M8

Series	718
Contacts	5 and 6 contacts
Rated current	3 A, 1.5 A
Rated voltage	30 V
Degree of protection	IP65
Contact plating	Au (gold)
Termination	PUR cable

718 Series · Moulded snap-in cable connectors with 5 and 6 contacts

- Extension of the M8 snap-in connector programme
- Male and female cable connector moulded on cable
- Straight version
- PUR cable, PVC cable in preparation
- Standard cable length is 2 m and 5 m
- Configurable according to customer requirements
- Available

Description	Drawing	Contacts	Cable length	Ordering-No.
Male cable connector, moulded, snap-in version, 8 mm		5	2 m	79 3413 52 05
			5 m	79 3413 55 05
		6	2 m	79 3415 52 06
			5 m	79 3415 55 06
Female cable connector, moulded, snap-in version, 8 mm		5	2 m	79 3418 52 05
			5 m	79 3418 55 05
		6	2 m	79 3420 52 06
			5 m	79 3420 55 06

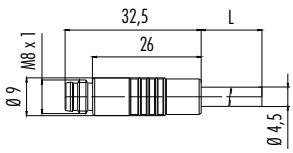

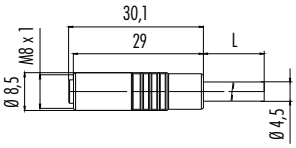

M8

Series	718
Contacts	3, 4, 6, 8
Rated current	4 A (3, 4 contacts) 1,5 A (6, 8 contacts)
Rated voltage	60 V (3, 4 contacts) 30 V (6, 8 contacts)
Shielding	360° shielding
Degree of protection	IP67 in mated condition
Contact plating	Au (gold)
Termination	PVC/PUR cable

718 Series · Male cable connector moulded and shielded

- Male cable connector moulded on cable
- Straight version
- PVC and PUR cable
- Standard cable length is 2 m and 5 m
- Configurable according to customer requirements
- Available

Description	Drawing	Contacts	Cable length	Ordering-No.
Male cable connector, moulded, shielded, PVC 	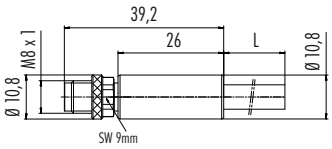	3	2 m	77 3505 0000 20703–0200
			5 m	77 3505 0000 20703–0500
		4	2 m	77 3505 0000 20704–0200
			5 m	77 3505 0000 20704–0500
		6	2 m	77 3505 0000 20706–0200
			5 m	77 3505 0000 20706–0500
		8	2 m	77 3505 0000 20708–0200
			5 m	77 3505 0000 20708–0500
Male cable connector, moulded, shielded, PUR 		3	2 m	77 3505 0000 50703–0200
			5 m	77 3505 0000 50703–0500
		4	2 m	77 3505 0000 50704–0200
			5 m	77 3505 0000 50704–0500
		6	2 m	77 3505 0000 50706–0200
			5 m	77 3505 0000 50706–0500
		8	2 m	77 3505 0000 50708–0200
			5 m	77 3505 0000 50708–0500

M12-A

Series	713
Contacts	4, 5, 8
Rated current	4 A
Rated voltage	250 V (4 contacts) 60 V (5 contacts) 30 V (8 contacts)
Shielding	360° shielding
Degree of protection	IP67 in mated condition
Contact plating	Au (gold)

713 Series · Lead-through for control cabinets

- Introduction of the lead-through for control cabinets in the new design
- For connections of signal, data and supply cables
- M12 screw and M16 fixing thread
- Easy and flexible installation
- Continuous contacts for robust and safe signal transmission
- Designed for operating temperatures from – 40 °C to + 85 °C
- Available

Description	Drawing	Contacts	Fixing thread	Ordering-No.
Adapter lead-through for control cabinet, female connector M12 x 1 – male connector M12 x 1, shielded		4	M16 x 1,5	09 5240 10 04
		5		09 5241 10 05
		8		09 5244 10 08

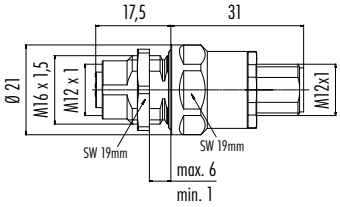

Panel cut out

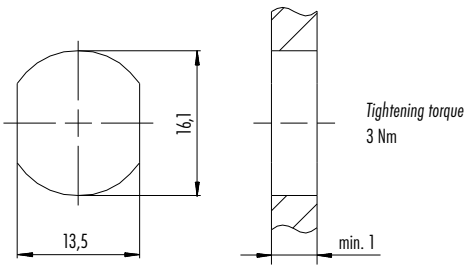

M12-A

Series	763
Contacts	4, 5, 8
Coding	A
Thread	M12
Rated current	4 A (4, 5 contacts) 2 A (8 contacts)
Rated voltage	250 V (4 contacts) 60 V (5 contacts) 30 V (8 contacts)
Degree of protection	IP69 in mated condition
Contact plating	Au (gold)
Termination	solder contacts, single wires AWG24

763 Series · M12 rectangular male panel-mount connectors 20 and 26 mm

- Portfolio extension of M12 square flange connectors with positionable and snap-in A-coding
- Two-piece square flange connector consisting of housing and contact carrier enables easy assembly
- The coding nose can be positioned in 45° steps
- Versions with 4, 5 and 8 contacts
- Available

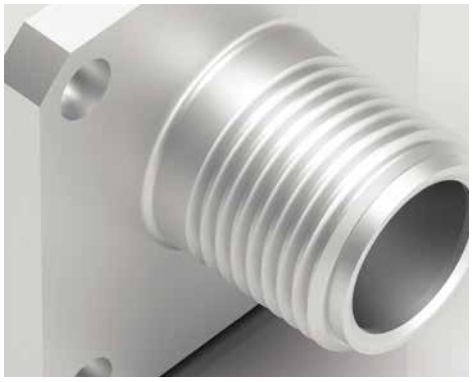

Description	Drawing	Contacts	Coding	Ordering-No.
Male panel-mount connector, rectangular flange, solder, positioning possible, lockable, housing 20 mm		4		99 3433 200 04
		5	A	99 3443 200 05
		8		99 3483 200 08

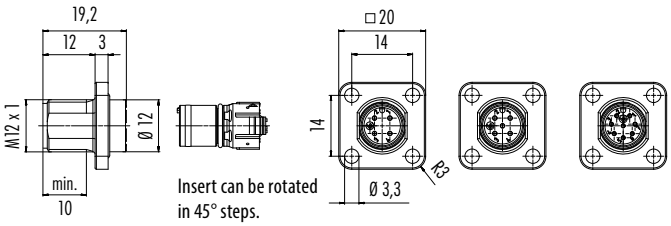

Male panel-mount connector, rectangular flange, with single wires, positioning possible, lockable, housing 26 mm		4		99 3433 116 04
		5	A	99 3443 116 05
		8		99 3483 116 08

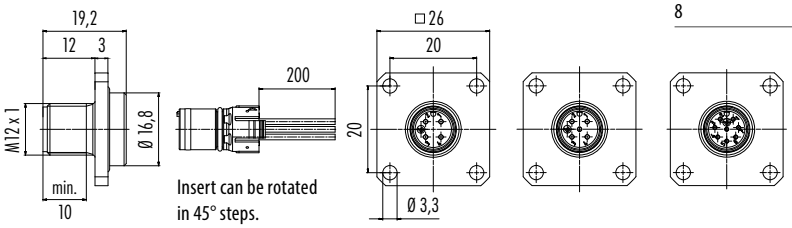

Assembly instruction

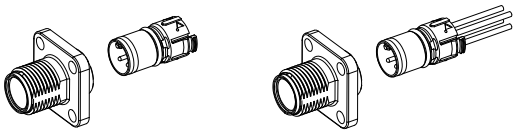

Assembly:
1. Put contact insert in desired mounting position into the housing until it is securely engages.

Disassembly:
1. Press detent lever.
2. Press out the contact body simultaneously with a suitable object, from the mating side, without damaging the contacts.

Note for contact insert with single wires:
When dismantling please do not pull the wires!

Panel cut out

Panel-mount connectors square flange

Housing 20 mm

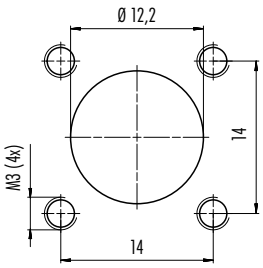

Housing 26 mm

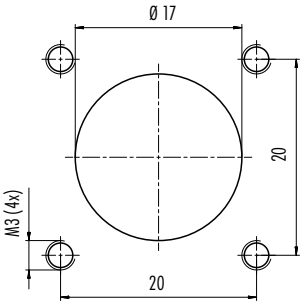

For degree of protection IP67 / IP68 / IP69:
The protection class specification applies under the requirement that the four mounting holes are designed as blind holes / screws in M3 through thread seal.

DATA TRANS MIS SION

M8-D

Series	818
Contacts	4
Rated current	4 A
Rated voltage	63 V DC
Degree of protection	IP67 in mated condition
Contact plating	Au (gold)

818 Series · Field-attachable, moulded and panel-mount connectors

- M8-D according to IEC 61076-2-114
- Category CAT 5e
- Suitable for PoE+
- Transmission 100 MBit/s Ethernet
- Temperature range –25°C/+85°C (static)
- IP67 in mated condition
- Available

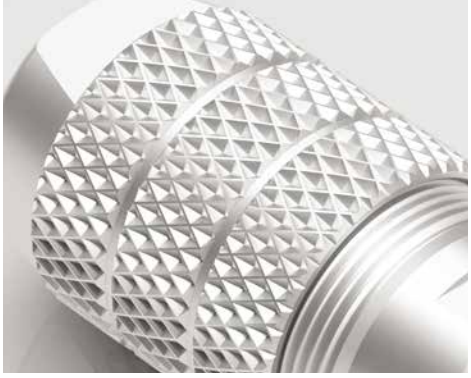

Description	Drawing	Contacts	Cable outlet	Ordering-No.
Male cable connector, screw clamp termination, iris type spring, shieldable, D-Coding		4	4–5,5 mm	99 3369 100 04

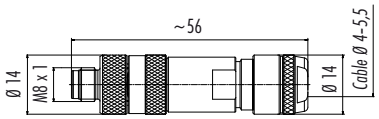

Male cable connector, screw clamp termination, iris type spring, shieldable, D-Coding		4	5–8 mm	99 3369 600 04

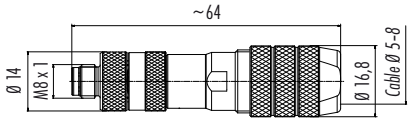

Female cable connector, screw clamp termination, iris type spring, shieldable, D-Coding		4	4–5,5 mm	99 3368 100 04

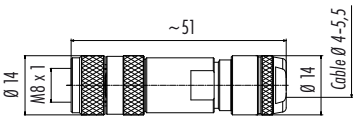

Female cable connector, screw clamp termination, iris type spring, shieldable, D-Coding		4	5–8 mm	99 3368 600 04

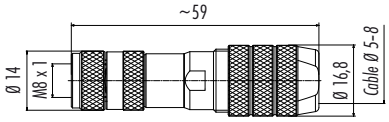

Assembly instruction

Cable outlet 4–5,5 mm

shielding braid diameter > 3,5 mm

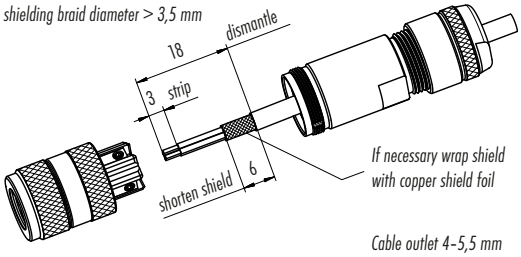

shielding braid diameter ≤ 3,5 mm

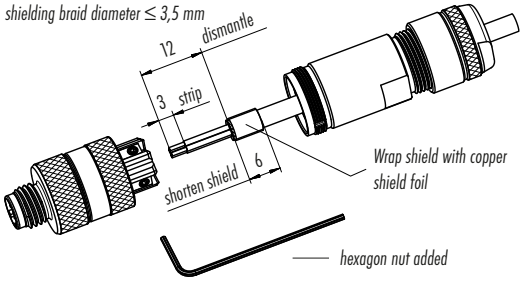

Cable outlet 5–8 mm

shielding braid diameter > 5,5 mm

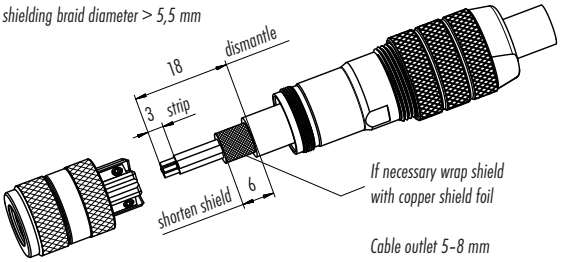

1. *Bead housing to cable.*
2. *Strip cable, shorten shielding braid.*
3. *Connect single wires.*
4. *Screw housing to either male or female contact carrier and tighten pressing screw.*

shielding braid diameter ≤ 5,5 mm

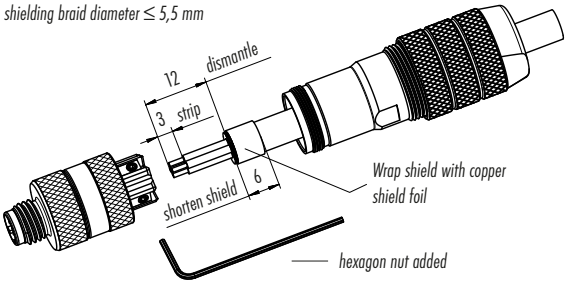

1. *Bead housing to cable.*
2. *Strip cable, shorten shielding braid, place it over cable coating, wrap it approx. 1 1/2 times with copper shield foil and shorten foil.*
3. *Connect single wires.*
4. *Screw housing to either male or female contact carrier and tighten pressing screw.*

Description	Drawing	Contacts	Cable length	Ordering-No.
Male cable connector, moulded, Ethernet cable, D-Coding		4	2 m	77 5429 0000 50704–0200
			5 m	77 5429 0000 50704–0500

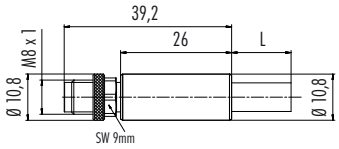

Female cable connector, moulded, Ethernet cable, D-Coding		4	2 m	77 5430 0000 50704–0200
			5 m	77 5430 0000 50704–0500

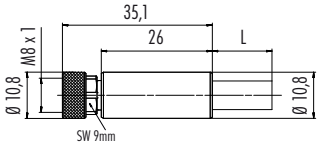

Male cable connector M8 x 1 – Male cable connector M8 x 1, D-Coding		4	1 m	77 5429 5429 50704–0100
			2 m	77 5429 5429 50704–0200

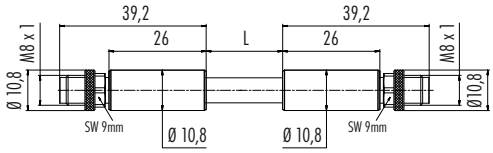

Male cable connector M8 x 1 – Female cable connector M8 x 1, D-Coding		4	1 m	77 5430 5429 50704–0100
			2 m	77 5430 5429 50704–0200

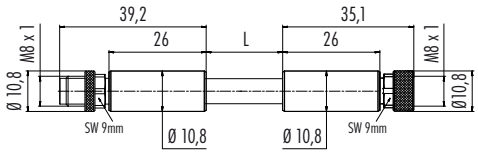

Contact arrangements

male insert (mating side)

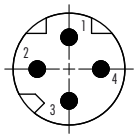

	X	Y
1	0,00	1,65
2	-1,65	0,00
3	0,00	-1,65
4	1,65	0,00

1 *yellow*
2 *white*
3 *orange*
4 *blue*

female insert (mating side)

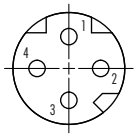

	X	Y
1	0,00	1,65
2	1,65	0,00
3	0,00	-1,65
4	-1,65	0,00

1 *yellow*
2 *white*
3 *orange*
4 *blue*

Specifications	Ethernet Cable
Contacts	**4**
Wire gauge mm²	4 x AWG 22
Material jacket	PUR
Insulation of wire	Polyolefin
Design of wire (mm)	7 x AWG 22
Cable diameter (mm)	6,7
Resistance of wire	55 Ω/Km (20 °C)
Temperature range cable in move	– 20 °C /+ 60 °C
Temperature range cable fixed	– 40 °C /+ 80 °C
Bending radius cable in move	min. 15 x d
Bending radius cable fixed	min. 5 x d
Bending radius (at 10 x D)	2 Mio.
Permitted acceleration	2 m/s²
Traverse path horizontal 5 m/s²	5 m
Traverse path vertical 5 m/s²	5 m
Traverse speed	At 5 m horizontal traverse up to 200 m/min
Approval	PROFINET, UL/CSA

Description	Drawing	Contacts	Ordering-No.
Male panel-mount connector, front fastened, dip solder, with shielding sheet, D-Coding		4	86 6321 1120 00404

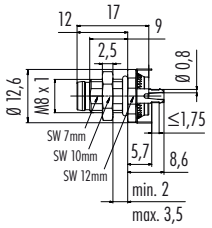

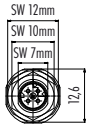

Thickness of PCB: ≤1,75 mm
Hexagon nut enclosed loose

Male angled panel-mount connector, front fastened, dip solder, with shielding sheet, D-Coding		4	86 6321 1121 00404

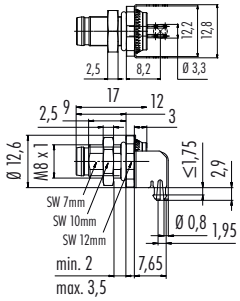

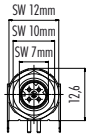

Thickness of PCB: ≤1,75 mm
Hexagon nut enclosed loose

Female panel-mount connector, front fastened, dip solder, with shielding sheet, D-Coding		4	86 6620 1120 00404

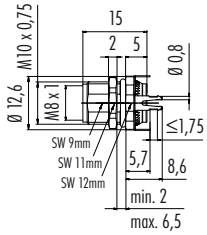

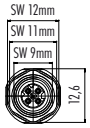

Thickness of PCB: ≤1,75 mm
Hexagon nut enclosed loose

Female angled panel-mount connector, front fastened, dip solder, with shielding sheet, D-Coding		4	86 6620 1121 00404

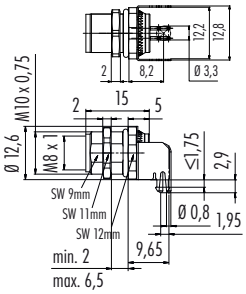

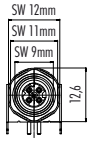

Thickness of PCB: ≤1,75 mm
Hexagon nut enclosed loose

Drilling schemes male insert (PCB), shielding sheet female insert (PCB), shielding sheet

4 contacts

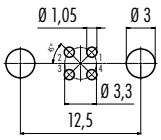

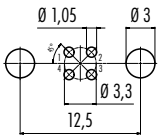

Panel cut out

With flats as anti-rotation device

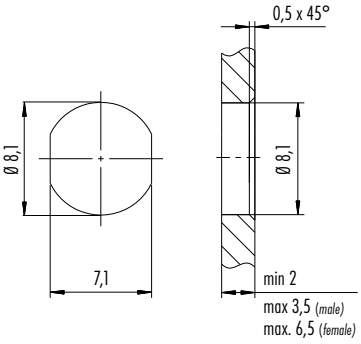

With bore hole

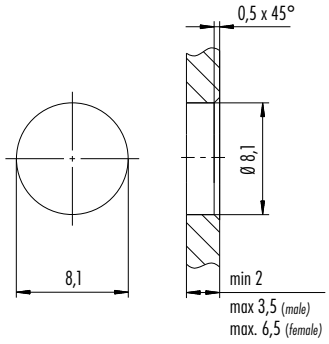

With thread to screw in

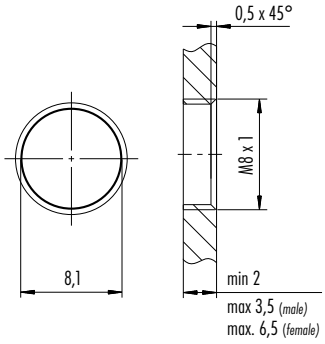

Tightening moment

Metal housing	1 Nm
Plastic housing	1 Nm

VOLTAGE AND POWER SUPPLY

M12-S, -K, -T, -L

Series	814, 824, 813, 823
Contacts	2+PE, 3+PE, 4+PE, 4, 4+FE
Rated current	12 A, 16 A
Rated voltage	630 V (S-/K-Coding) 63 V (T-/L-Coding)
Shielding	360° shielding
Degree of protection	IP67 in mated condition
Contact plating	Au (gold)

814, 824, 813, 823 Series · Lead-through for control cabinets

- Introduction of the lead-through for control cabinets in the new design
- Enables the connection of signal, data and supply cables
- M12 screw and M16 fixing thread
- Easy and flexible installation
- Continuous contacts for robust and safe signal transmission
- Designed for operating temperatures from – 40 °C to + 85 °C
- Available

Description	Drawing	Contacts	Fixing thread	Ordering-No.
M12-S Adapter lead-through for control cabinet, female connector M12 x 1 – male connector M12 x 1, shielded	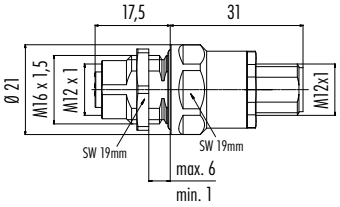	2+PE	M16 x 1,5	09 5270 10 03
		3+PE		09 5271 10 04
M12-K Adapter lead-through for control cabinet, female connector M12 x 1 – male connector M12 x 1, shielded	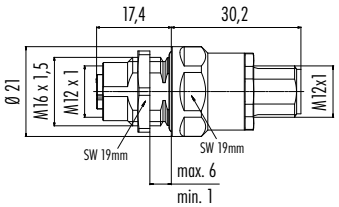	4+PE	M16 x 1,5	09 5290 10 05
M12-T Adapter lead-through for control cabinet, female connector M12 x 1 – male connector M12 x 1, shielded	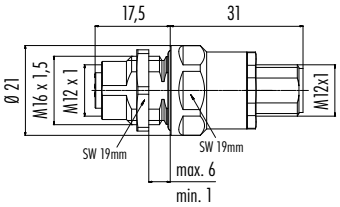	4	M16 x 1,5	09 5260 10 04
M12-L Adapter lead-through for control cabinet, female connector M12 x 1 – male connector M12 x 1, shielded	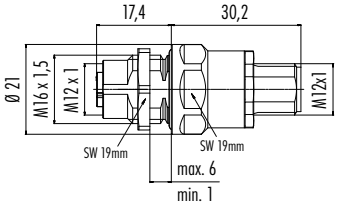	4+FE	M16 x 1,5	09 5291 10 05

Panel cut out

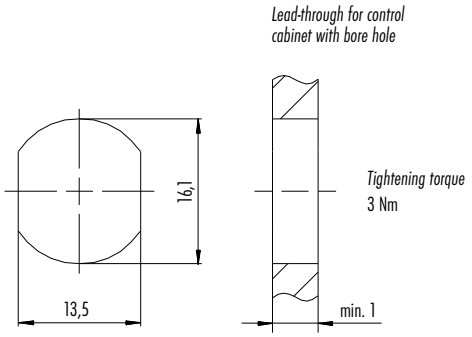

M12-K/-L

Series	824, 823
Contacts	4+PE, 4+FE
Coding	K, L
Thread	M12 x 1
Rated current	12 A, 16 A
Rated voltage	630 V AC, 63 V DC
Degree of protection	IP67
Contact plating	Au (gold)

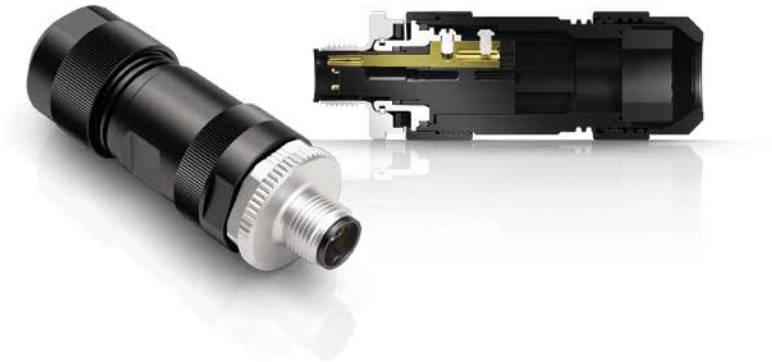

824/823 Series · M12 K- & L-coded cable connectors acc. to UL 2237

- Screw clamp connection
- Cable outlet up to 13 mm
- PE connection to the threaded ring
- UL 2237 achievable
- K-coded: 4+PE, current 12 A, voltage 630 V AC
- L-coded: 4+FE, current 16 A, voltage 63 V DC
- Available

Description	Drawing	Contacts	Coding	Cable outlet	Ordering-No.
Male cable connector with **K-Coding**, screw clamp connection, Power	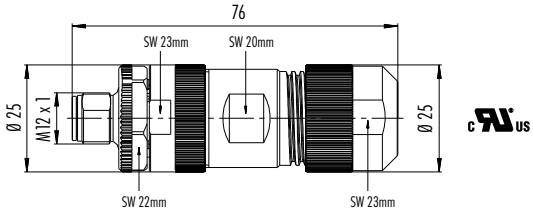	4+PE	K	8–13 mm	99 0699 37 05
Male angled connector with **K-Coding**, screw clamp connection, Power	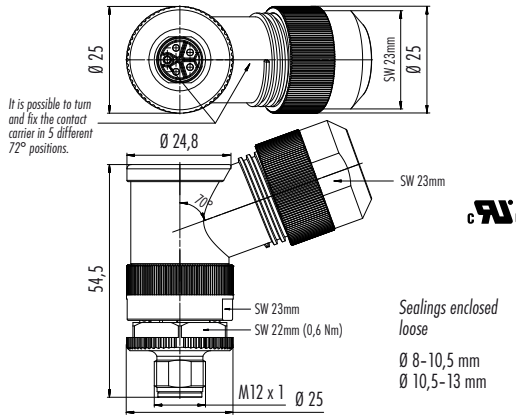	4+PE	K	8–13 mm	99 0699 370 05
Female cable connector with **K-Coding**, screw clamp connection, Power	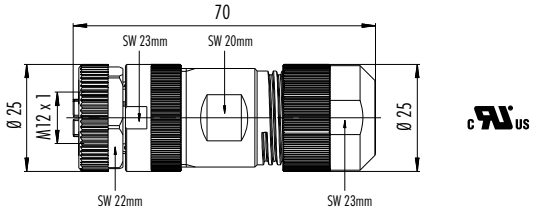	4+PE	K	8–13 mm	99 0700 37 05
Female angled connector with **K-Coding**, screw clamp connection, Power	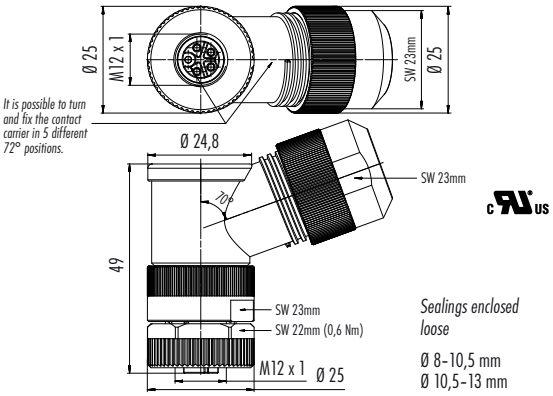	4+PE	K	8–13 mm	99 0700 370 05

Description	Drawing	Contacts	Coding	Cable outlet	Ordering-No.
Male cable connector with **L-Coding**, screw clamp connection, Power		4+FE	L	8–13 mm	99 0639 37 05
Male angled connector with **L-Coding**, screw clamp connection, Power		4+FE	L	8–13 mm	99 0639 370 05
Female cable connector with **L-Coding**, screw clamp connection, Power		4+FE	L	8–13 mm	99 0640 37 05
Female angled connector with **L-Coding**, screw clamp connection, Power		4+FE	L	8–13 mm	99 0640 370 05

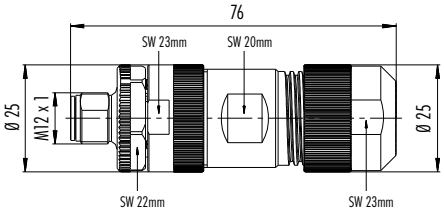

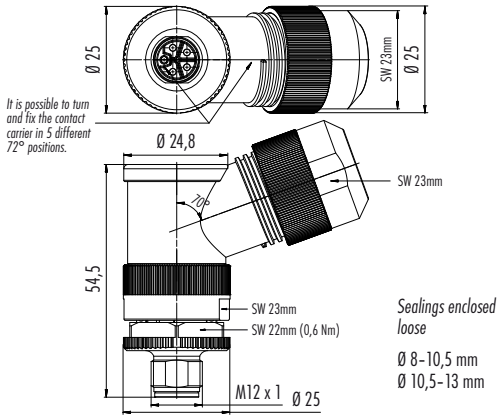

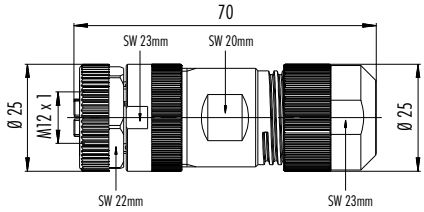

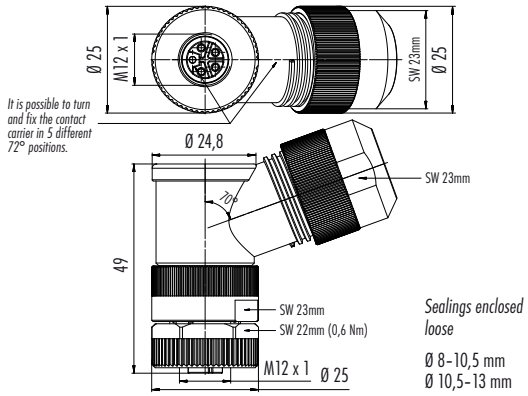

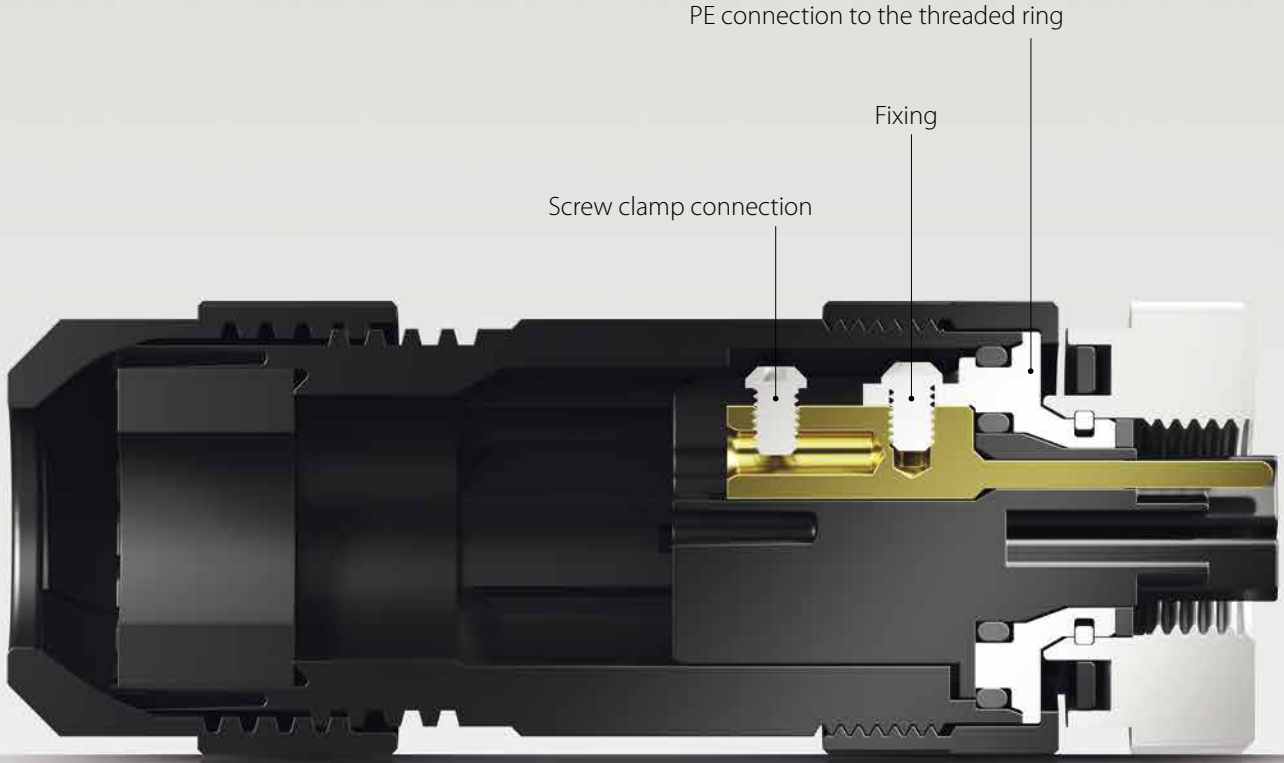
PE connection to the threaded ring
Fixing
Screw clamp connection

M12-L

Series	823
Contacts	4+FE
Coding	L
Thread	M12 x 1
Rated current	16 A
Rated voltage	63 V DC
Degree of protection	IP68 in mated condition
Contact plating	Au (gold)

823 Series · M12 L-Coded panel-mount connectors two-part design

- Dip solder contacts
- 16 A, 63 V
- Front and rear fastening
- Contact insert and panel-mount housing have no permanent connection
- Grey contact body
- Contacts with gold surface
- Suitable for reflow soldering
- Available

Description	Drawing	Contacts	Fixing thread	Ordering-No.
Male panel-mount connector, two-part design, Power, L-coding		4+FE	M16 x 1,5	99 0641 20 05

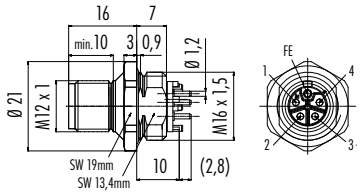

Male panel-mount connector, front fastened, two-part design, Power, L-coding		4+FE	M16 x 1,5	99 0641 10 05

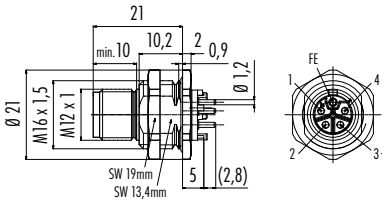

Female panel-mount connector, two-part design, Power, L-coding		4+FE	M16 x 1,5	99 0642 20 05

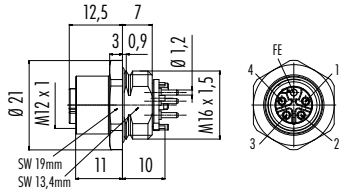

Female panel-mount connector, front fastened, two-part design, Power, L-coding		4+FE	M16 x 1,5	99 0642 10 05

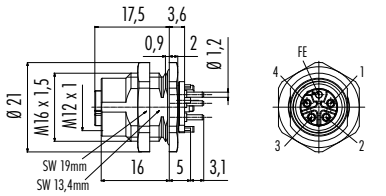

Drilling schemes

4 contacts

male insert (PCB), shielding sheet

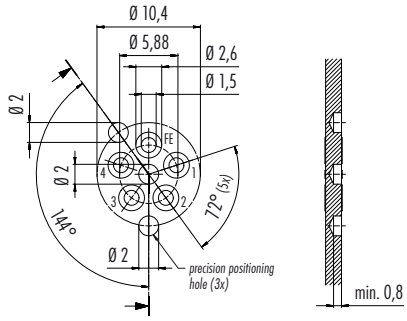

	X	Y
FE	0,00	2,94
1	2,80	0,91
2	1,73	-2,38
3	-1,73	-2,38
4	-2,80	0,91
Pos.	0,00	0,00
Pos.	0,00	-5,2
Pos.	-3,06	4,21

female insert (PCB), shielding sheet

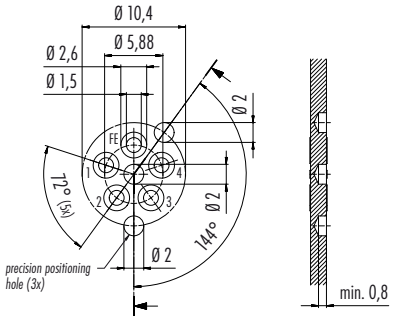

	X	Y
FE	0,00	2,94
1	-2,80	0,91
2	-1,73	-2,38
3	1,73	-2,38
4	2,80	0,91
Pos.	0,00	0,00
Pos.	0,00	-5,2
Pos.	3,06	4,21

Panel cut out

Panel-mount connectors

With flats as anti-rotation device

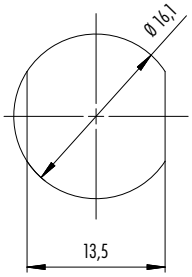

With bore hole

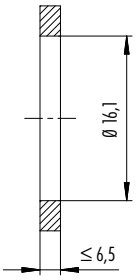

Rear mounting

With thread to screw in

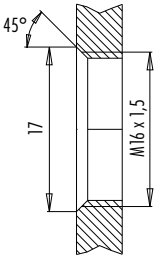

Front mounting

With thread to screw in

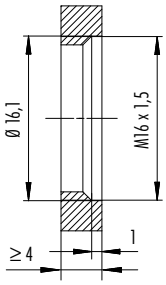

Screw-in direction panel-mount part

Tightening moment

Metal housing	1,25 Nm
Plastic housing	1,25 Nm

binder

E. HARTNER&CO

PROFESSIONAL SOLUTIONS ON A PERSONAL LEVEL

E.Hartner & Co GmbH
Triester Straße 190, 1230 Wien, Austria

phone +43 (1) 914 43 96 - 13
fax +43 (1) 914 97 89 - 15

office@ehartner.at
www.ehartner.at

03/2022

Specifications may be changed without notice, errors excepted.

Terms: www.binder-connector.com/en/terms

Ordering-No. W PN EN 2022 HQ